REVISIONS			
REV	DESCRIPTION	DATE	APPROVED
2	WAS CLOSED TOOL	5/5/11	BTH

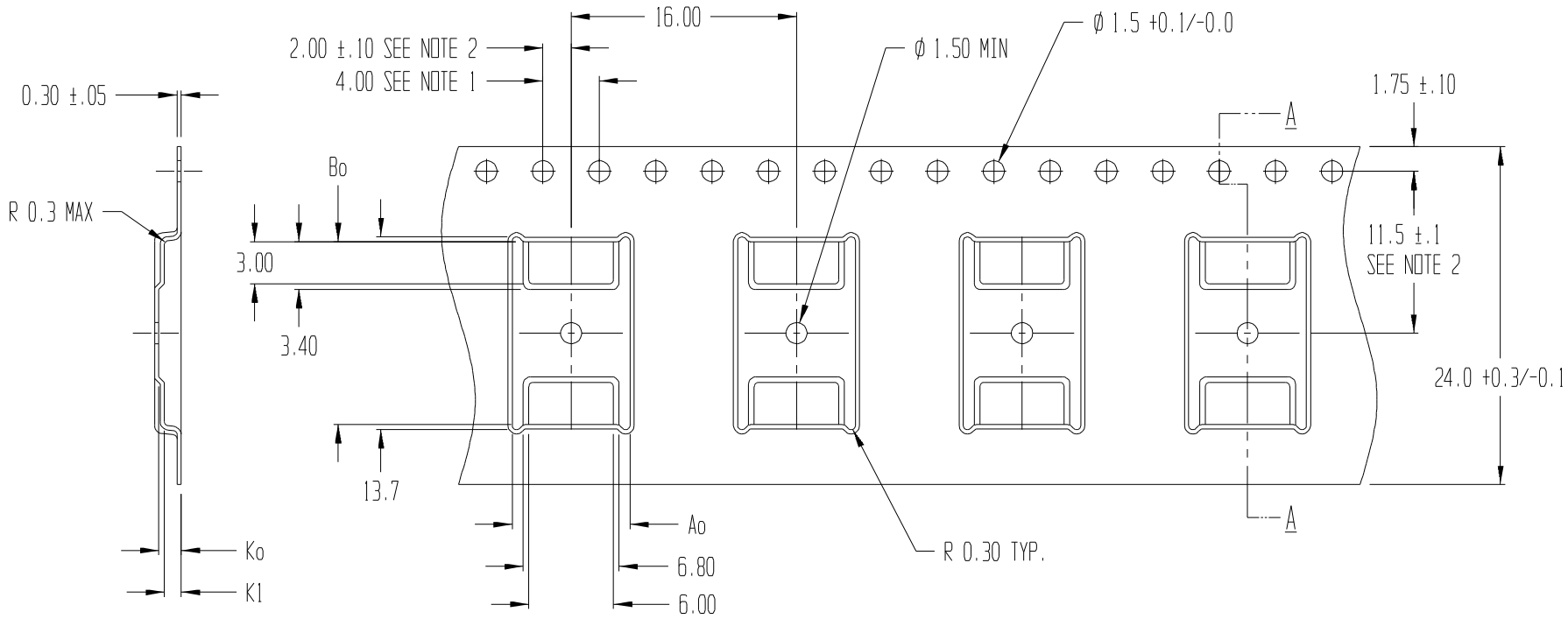

SECTION A - A

Ao = 8.35
Bo = 13.00
Ko = 1.60
K1 = 1.20

NOTES:
1. 10 SPROCKET HOLE PITCH CUMULATIVE TOLERANCE ±0.2
2. POCKET POSITION RELATIVE TO SPROCKET HOLE MEASURED AS TRUE POSITION OF POCKET, NOT POCKET HOLE
3. Ao AND Bo ARE CALCULATED ON A PLANE AT A DISTANCE "R" ABOVE THE BOTTOM OF THE POCKET.

ADVANTEK® engineered confidence™

TITLE	ADVANTEK PART DRAWING NUMBER TSS048-A CARRIER TAPE		
TOLERANCES - UNLESS NOTED 1PL ±.2 2PL ±.10	MATERIAL PS+C		DWG SIZE B
	ALL DIMS IN MILLIMETERS PER ASME Y14.5M		
DRAWN BY T.S./BTH	DATE 10/15/93	SCALE 3:1	SHEET 1 OF 1
CK'D BY	PROJECT NO. 7417.00	DWG NO. A1104-93-4	REV 2