| REVISIONS | | | |
|---|---|---|---|
| REV | DESCRIPTION | DATE | APPROVED |
| | | | |

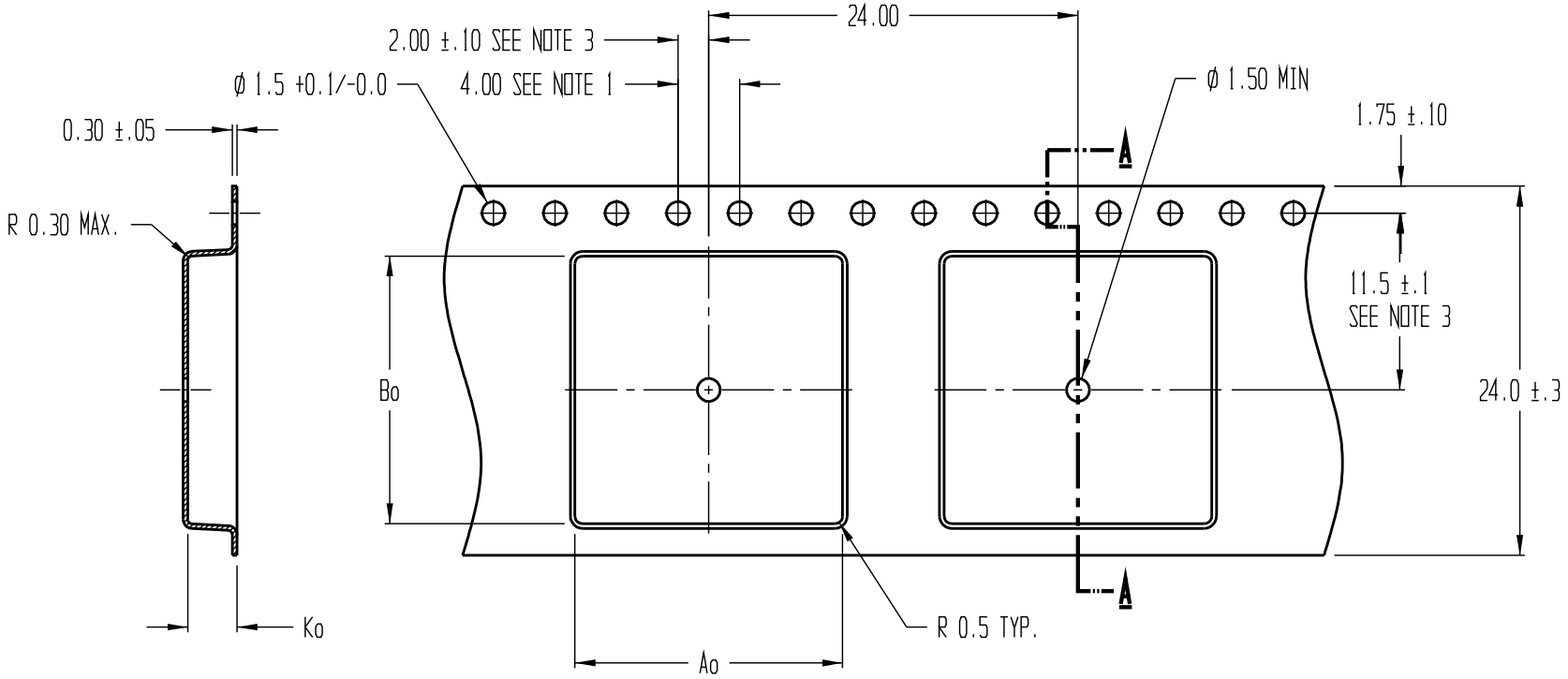


## SECTION A - A

Ao = 17.4
Bo = 17.4
Ko = 3.2

NOTES:
1. 10 SPROCKET HOLE PITCH CUMULATIVE TOLERANCE ±0.2
2. CAMBER IN COMPLIANCE WITH EIA 481
3. POCKET POSITION RELATIVE TO SPROCKET HOLE MEASURED AS TRUE POSITION OF POCKET, NOT POCKET HOLE

ADVANTEK

| | | | |
|---|---|---|---|
| TITLE | ADVANTEK PART DRAWING NUMBER BG1717-H CARRIER TAPE | | |
| TOLERANCES - UNLESS NOTED 1PL ±.2 2PL ±.10 | MATERIAL PS+C | | |
| | ALL DIMENSIONS IN MILLIMETERS | DWG SIZE B | |
| DRAWN BY TMO | DATE 02/02/2004 | SCALE 3:1 | SHEET 1 OF 1 |
| REFERENCE NO. T-12731 | DWG NO. T104565BT | | REV |