REVISIONS			
REV	DESCRIPTION	DATE	APPROVED
1	0.15 was 0.1; 0.5 was 0.8	7/19/91	DBC
2	Changed Patent Note	3/31/93	T.S.
3	Ao & Bo were 33.5; -F was -B	1/19/94	T.S.
4	Was 0.15	4/14/97	SDC
5	Drawing format change	5/16/03	BVB

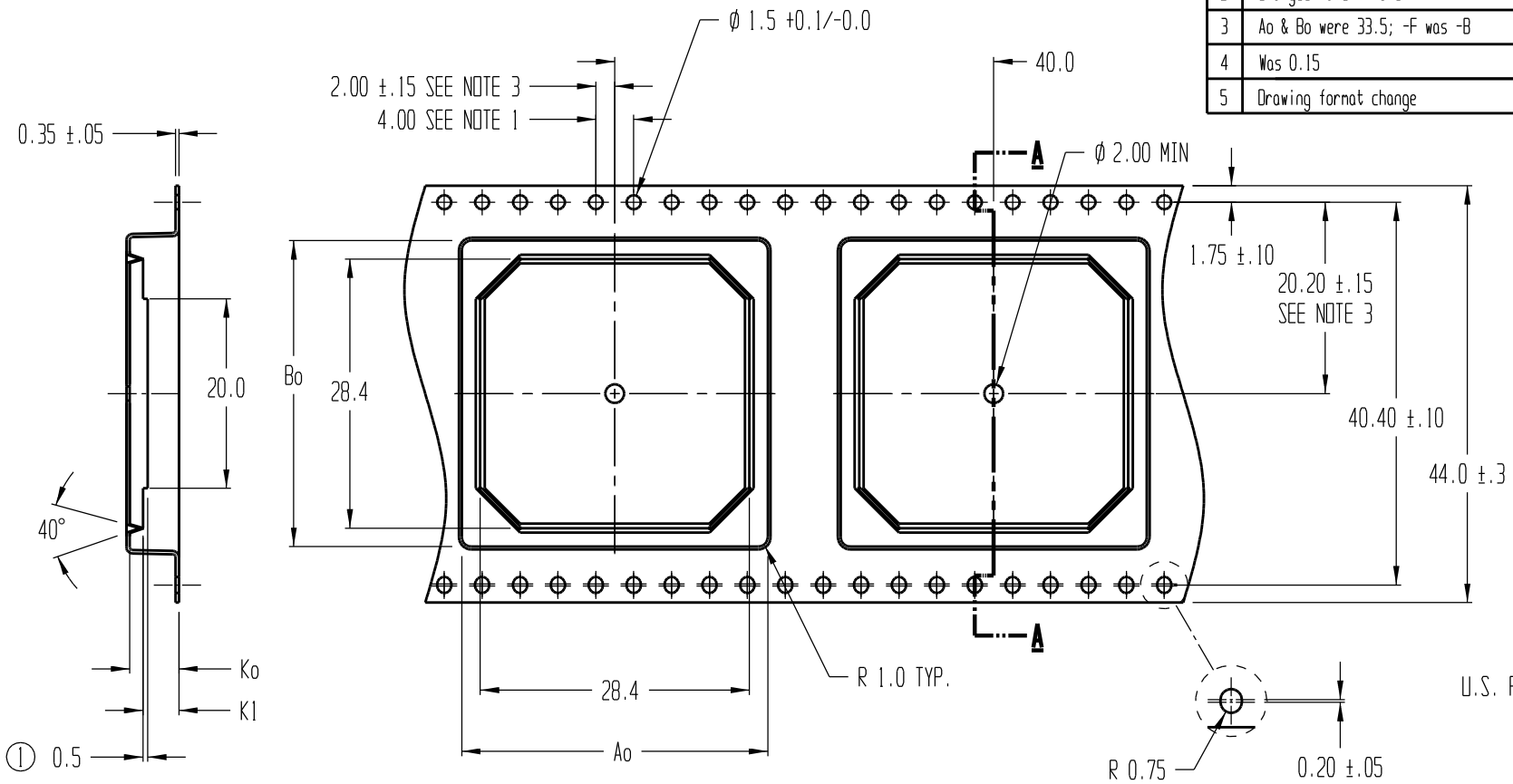

2 U.S. PATENT 5152393

SECTION A - A

3 Ao = 32.30
Bo = 32.30
Ko = 5.20
K1 = 3.80

NOTES:
1. 10 SPROCKET HOLE PITCH CUMULATIVE TOLERANCE ±0.2
2. CAMBER IN COMPLIANCE WITH EIA 481
3. POCKET POSITION RELATIVE TO SPROCKET HOLE MEASURED AS TRUE POSITION OF POCKET, NOT POCKET HOLE

ADVANTEK

TITLE	ADVANTEK PART DRAWING NUMBER Q28X28-F 3 CARRIER TAPE		
TOLERANCES - UNLESS NOTED 1PL ±.2 2PL ±.10	MATERIAL PS+C		
	ALL DIMENSIONS IN MILLIMETERS	DWG SIZE B	
DRAWN BY CKS/BVB	DATE 5/2/91	SCALE 2:1	SHEET 1 OF 1
REFERENCE NO.	DWG NO. A0502-91-3		REV 5